SMALL INVERTERS MMA 85A

CEMONT S1000

Loc. Casalmenini - 37010 Rivoli Veronese - Verona -Italy
Tel. (+39). 45.6208901 - Fax (+39). 45.6200041 - Txl 481294 CEM I

REPAIR SCORES

SERIES: 1104 Small Inverters (S)MMA 85A Fixed Points 20

Repair code		Repair scores
01	Control board	9
11	Switch	2
14	Electric fan	4
28	Detached wire repair	4

1.0 REPAIR INSTRUCTIONS

1.1 GENERAL CLEANING

Remove the machine shell and clean carefully with compressed air.

1.2 MACHINE: VISUAL INSPECTION

1. Check the general conditions of the electronic circuit ref. 1, particularly:
   - the varistor (fig. 1) if it presents bursting marks
   - the state of the levelling condensers C29 and C30, check if there are swellings or breaks on the container

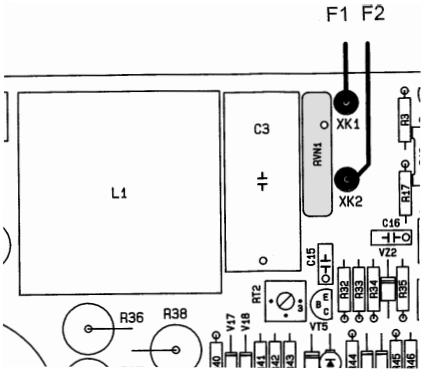

FIG. 1 REF. 1

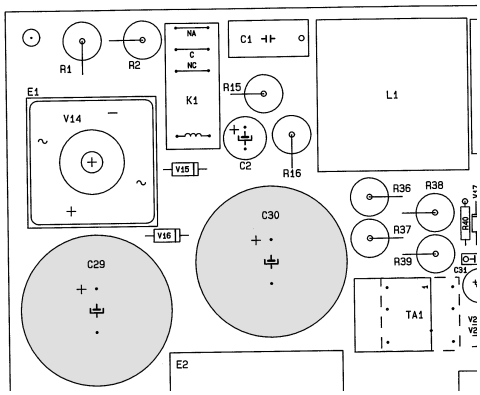

FIG. 2 REF. 1

   - check for the presence of cracks or breaks on the welds of the following components:
     - transformer T1
     - impedance L2
   - the presence of burn tracks or electric discharge marks on the printed circuit

In case of faults, replace the electronic circuit ref. 1

2. Check on all the harnesses the insulation of the cables and the state at the connection points.

1.3 CHECK OF THE MAIN COMPONENTS WITH TESTER (OHMMETER) ON THE CIRCUIT REF. 1

1. Check for the presence of short circuits on the rectifier bridge and the correct value of the power resistance (fig. 3)

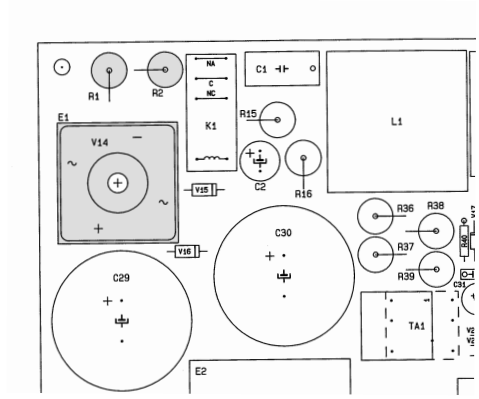

FIG. 3 REF. 1

2. IGBT of the primary circuit and diodes of recycle: test points G-C, G-E, C-E of components 1 and 2; points A-K of components 3 and 4 (fig. 4)

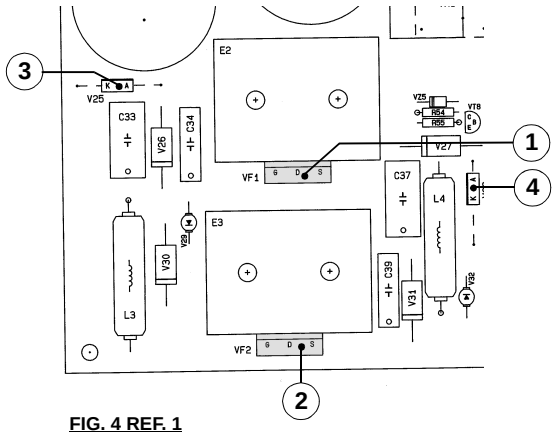

FIG. 4 REF. 1

3. Diodes of the secondary circuit: check points A-B of diode 1 and points A-C of diode 2 (fig. 5).

   If there are short circuits or faults during these tests, replace the electronic circuit.

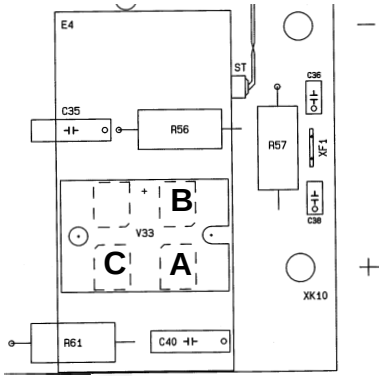

FIG. 5 REF. 1

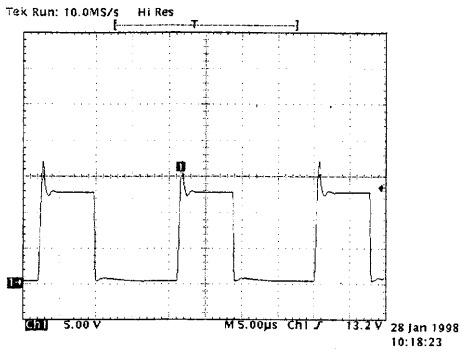

FIG. 8 REF. 1

1.4 CHECK OF GENERATOR OPERATION WITH OSCILLOSCOPE AND VOLTMETER

1. Connect a feeder on the zener VZ2 with GND on the anode and supply with approx. 15Vdc; set the oscilloscope on a time base of 5 uS and a range of 0.5 V/Div with probe x10 and verify:
   - the presence between points: E (GND) - A (probe) and F (GND) - B (probe) (fig. 7) of the waveform shown in fig. 8: if the waveform differs from the one in the figure or it is not present, the electronic circuit is broken.
     Solution: board replacement ref. 1.

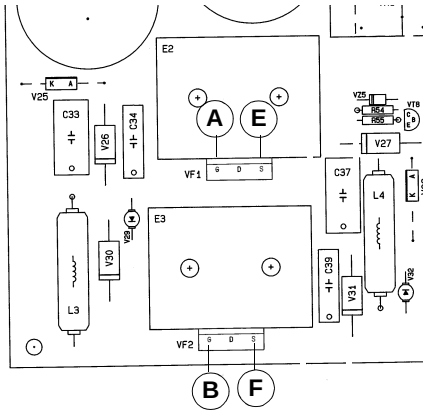

FIG. 7 REF. 1

2. Disconnect the feeder; set the oscilloscope with a range of 1V/Div and connect the probe X100 between points M and P (fig. 9); connect the machine to the power supply, switch it on:

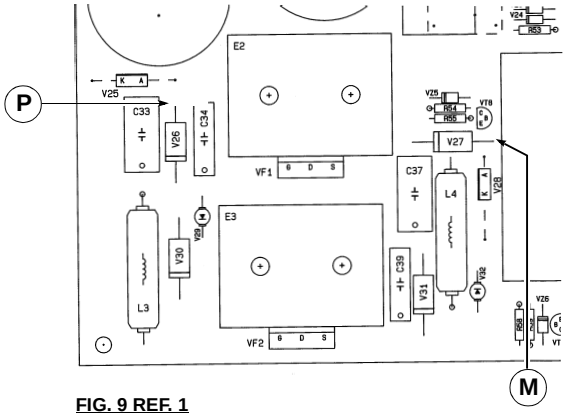

FIG. 9 REF. 1

   - the motor fan starts up, and after approx. 2 seconds a wave will appear as in fig. 10.

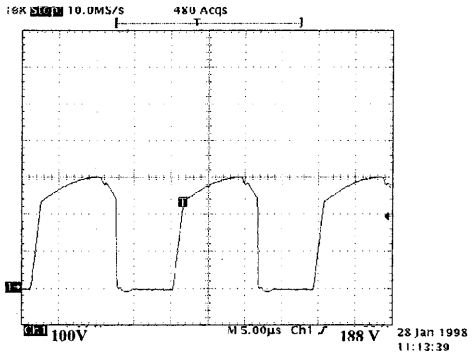

FIG. 10 REF.1

- check with a voltmeter that the output voltage is approx. 55Vdc (see test specification point 2).
- If the wave form does not appear or the output voltage is not correct, replace the electronic circuit ref. 1

Carry out the final test after the repair.

2.0 FINAL TEST

1. Carry out the safety test according to our operative instruction N. SLL12, before proceeding, act as follows:
   - on the electronic board (ref. 1) short-circuit points U, T and a rheophore of the primary circuit of the transformer (fig. 12)switch on
   - switch on
   - short-circuit the feeder plug
   - short-circuit the output dinse..

After the test remove all the short circuits and switch off.

2. Connect the generator to the power supply (230 Vac), switch it on and check if the voltage of the outputs is 55 Vdc (+/- 5%): switch off the generator.
3. Connect the generator to the resistive load: the load must be regulated so that the voltage on the load, with maximum current, is between 20V and 24V. Apply oscilloscope probe as in fig. 8
4. Set the regulation knob to the centre of the dial, switch on the generator, turn the knob to the maximum welding current and read with the amperometer the maximum current indicated on the technical table with +/- 5% tolerance. You will see on the oscilloscope a waveform as in fig. 12.
5. If the current readings differ, use the trimmer T (fig. 13) to obtain the correct current value.
6. Short-circuit the load and verify that after 1,5 sec. the current descends to approx. 35A.
7. Regulate the resistive load to measure the minimum current (8A - 20V), set the minimum current on the frontal panel and check with the amperometer that there is a value lower than the one indicated on the technical table.
8. Disconnect the probe, switch off the generator and with the load to the maximum current, let the machine work at the greatest capacity till the thermostatic protection intervenes (the thermostatic protection led turns on).
9. Disconnect the machine from the resistive load and wait until the machine starts to work again (the thermostatic protection led turns off).
10. Carry out MMA welding tests at maximum current (one electrode)

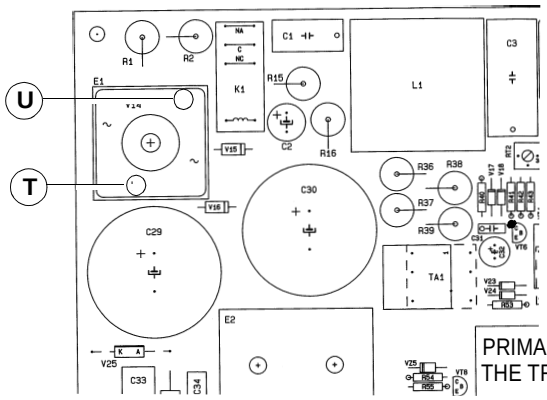

FIG. 11 REF. 1

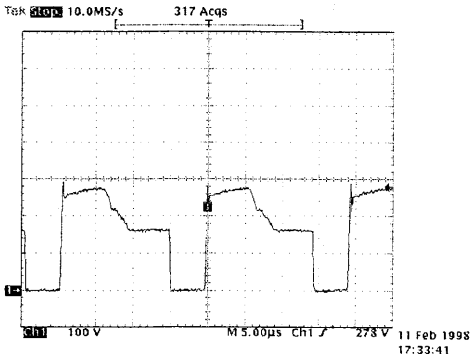

FIG. 12 REF. 1

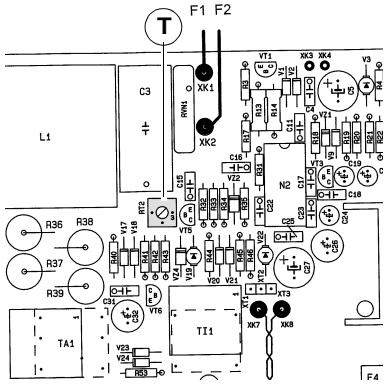

FIG. 13 REF. 1

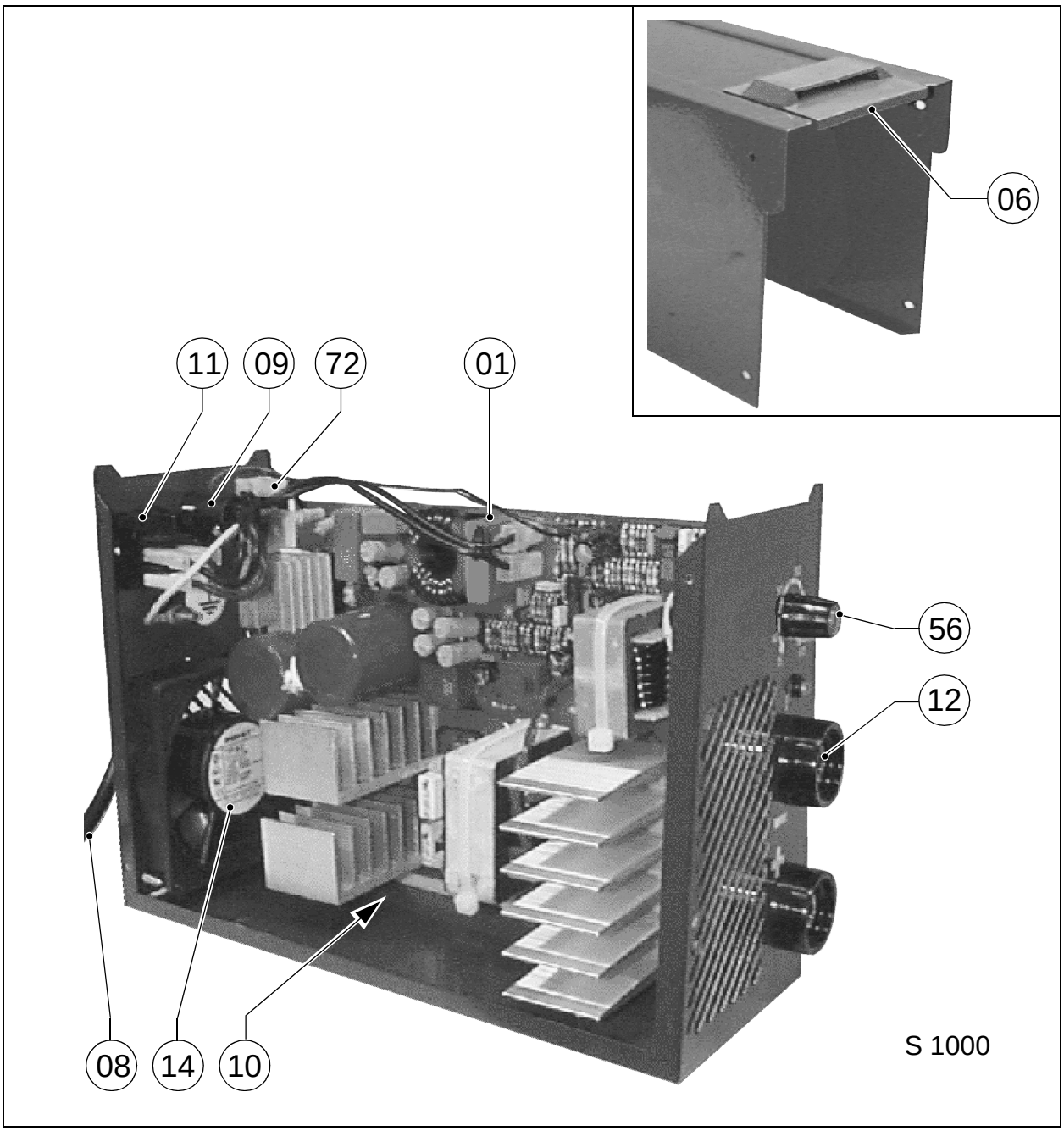
06
11
09
72
01
56
12
08
14
10
S 1000

LISTA RICAMBI S 1000 230V

REF.	CODE	DESCRIZIONE	DESCRIPTION	DESCRIPTION	BESCHREIBUNG	DESCRIPCIÓN
01	800022451	CIRCUITO ELETTRONICO	CIRCUIT BOARD	CIRCUIT ÉLECTRONIQUE	ELEKTRONISCHE SCHALTUNG	CIRCUITO ELECTRÓNICO
06	800018138	AGGANCIO CINGHIA	FITTING BELT	ANNEAU D'ACC. DE LA SANGLE	KUPPLUNG	ENGANCHE
08	800043592	CAVO DI ALIMENTAZIONE	POWER CABLE	CABLE D'ALIMENTATION	NETZKABEL	CABLE DE ALIM.
09	800018908	PRESSA CAVO	CABLE CLAMP	SERRE-CABLE	KABELSCHELLE	PRENSACABLE
10	800005503	BLOCCHETTO DI FISSAGGIO	BLOCK FIXING	GUIDE CARTE	BEFESTIGUNGS-LAGER	BLOQUE DE FIJACIÓN
10.1	090020135	INSERTO	INSERT	INSERT	EINSATZ	INSERTO
11	035038041	INTERRUTTORE	SWITCH	INTERRUPTEUR	SCHALTER	INTERRUPTOR
12	800019348	RACCORDO DINSE	DINSE COUPLING	EQUERRE SUPPORT DINSE	VERSCHRAUBUNG	EMPALME DINSE
14	073010037	MOTOVENTILATORE	ELECTRIC FAN	MOTOVENTILATEUR	MOTORLÜFTER	VENTILADOR ELÉC.
19	800041050	CINGHIA	BELT	SANGLE	GÜRTEL	CORREA
56	090015031	MANOPOLA	KNOB	VOLANT POIGNÉE	DREHKNOPF	VOLANTE PERILLA
72	023065206	SUPPORTO	SUPPORT	SUPPORT	AUFHÄNGUNG	SUPORTE

LISTA RICAMBI S 1000 115V

Ref.	Code	DESCRIZIONE	DESCRIPTION	DESCRIPTION	BESCHREIBUNG	DESCRIPCIÓN
01	800022531	CIRCUITO ELETTRONICO	CIRCUIT BOARD	CIRCUIT ÉLECTRONIQUE	ELEKTRONISCHE SCHALTUNG	CIRCUITO ELECT.
06	800018138	AGGANCIO CINGHIA	FITTING BELT	ANNEAU D'ACC. DE LA SANGLE	KUPPLUNG	ENGANCHE
08	800044035	CAVO DI ALIMENTAZIONE	POWER CABLE	CABLE D'ALIMENTATION	NETZKABEL	CABLE DE ALIM.
09	800018908	PRESSA CAVO	CABLE CLAMP	SERRE-CABLE	KABELSCHELLE	PRENSACABLE
10	800005503	BLOCCHETTO DI FISSAGGIO	BLOCK FIXING	GUIDE CARTE	BEFESTIGUNGS-LAGER	BLOQUEO DE FIJACIÓN
10.1	090020135	INSERTO	INSERT	INSERT	EINSATZ	INSERTO
11	035038041	INTERRUTTORE	SWITCH	INTERRUPTEUR	SCHALTER	INTERRUPTOR
12	800019348	RACCORDO USCITA	COUPLING	RACCORD	VERSCHRAUBUNG	EMPALME
14	073010037	MOTOVENTILATORE	ELECTRIC FAN	MOTOVENTILATEUR	MOTORLÜFTER	VENTILADOR ELÉC.
19	800041050	CINGHIA	BELT	SANGLE	GÜRTEL	CORREA
56	090015031	MANOPOLA	KNOB	VOLANT POIGNÉE	DREHKNOPF	VOLANTE PERILLA
72	023065206	SUPPORTO SCHEDE	SUPPORT	SUPPORT	AUFHÄNGUNG	SUPORTE

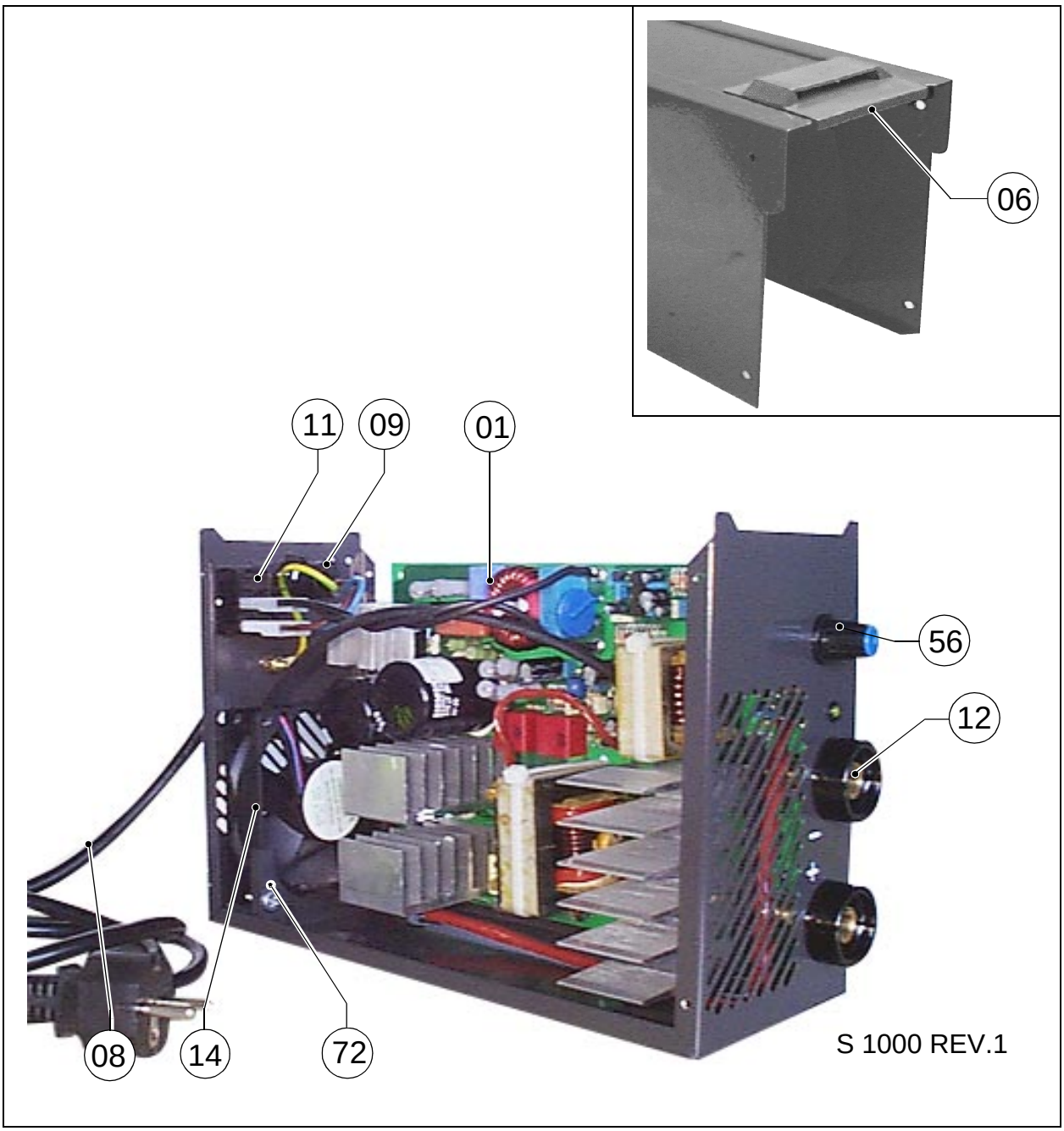
06
11
09
01
56
12
08
14
72
S 1000 REV.1

LISTA RICAMBI S 1000 230V

Ref.	Code	DESCRIZIONE	DESCRIPTION	DESCRIPTION	BESCHREIBUNG	DESCRIPCIÓN
01	800022451	CIRCUITO ELETTRONICO	CIRCUIT BOARD	CIRCUIT ÉLECTRONIQUE	ELEKTRONISCHE SCHALTUNG	CIRCUITO ELECTRÓNICO
06	800018138	AGGANCIO CINGHIA	FITTING BELT	ANNEAU D'ACC. DE LA SANGLE	KUPPLUNG	ENGANCHE
08	800043592	CAVO DI ALIMENTAZIONE	POWER CABLE	CABLE D'ALIMENTATION	NETZKABEL	CABLE DE ALIM.
09	800018908	PRESSA CAVO	CABLE CLAMP	SERRE-CABLE	KABELKLEMME	PRENSACABLE
11	035038041	INTERRUTTORE	SWITCH	INTERRUPTEUR	SCHALTER	INTERRUPTOR
12	800019348	RACCORDO DINSE	DINSE COUPLING	EQUERRE SUPPORT DINSE	VERSCHRAUBUNG	EMPALME DINSE
14	073010037	MOTOVENTILATORE	ELECTRIC FAN	MOTOVENTILATEUR	MOTORLÜFTER	VENTILADOR ELÉC.
19	800041050	CINGHIA	BELT	SANGLE	GÜRTEL	CORREA
56	090015031	MANOPOLA	KNOB	VOLANT POIGNÉE	DREHKNOPF	VOLANTE PERILLA
72	800019504	SUPPORTO	SUPPORT	SUPPORT	AUFHÄNGUNG	SUPORTE

LISTA RICAMBI S 1000 115V

Ref.	Code	DESCRIZIONE	DESCRIPTION	DESCRIPTION	BESCHREIBUNG	DESCRIPCIÓN
01	800022531	CIRCUITO ELETTRONICO	CIRCUIT BOARD	CIRCUIT ÉLECTRONIQUE	ELEKTRONISCHE SCHALTUNG	CIRCUITO ELECTRÓNICO
06	800018138	AGGANCIO CINGHIA	FITTING BELT	ANNEAU D'ACC. DE LA SANGLE	KUPPLUNG	ENGANCHE
08	800044035	CAVO DI ALIMENTAZIONE	POWER CABLE	CABLE D'ALIMENTATION	NETZKABEL	CABLE DE ALIM.
09	800018908	PRESSA CAVO	CABLE CLAMP	SERRE-CABLE	KABELKLEMME	PRENSACABLE
11	035038041	INTERRUTTORE	SWITCH	INTERRUPTEUR	SCHALTER	INTERRUPTOR
12	800019348	RACCORDO USCITA	COUPLING	RACCORD	VERSCHRAUBUNG	EMPALME
14	073010037	MOTOVENTILATORE	ELECTRIC FAN	MOTOVENTILATEUR	MOTORLÜFTER	VENTILADOR ELÉC.
19	800041050	CINGHIA	BELT	SANGLE	GÜRTEL	CORREA
56	090015031	MANOPOLA	KNOB	VOLANT POIGNÉE	DREHKNOPF	VOLANTE PERILLA
72	800019504	SUPPORTO SCHEDE	SUPPORT	SUPPORT	AUFHÄNGUNG	SUPORTE

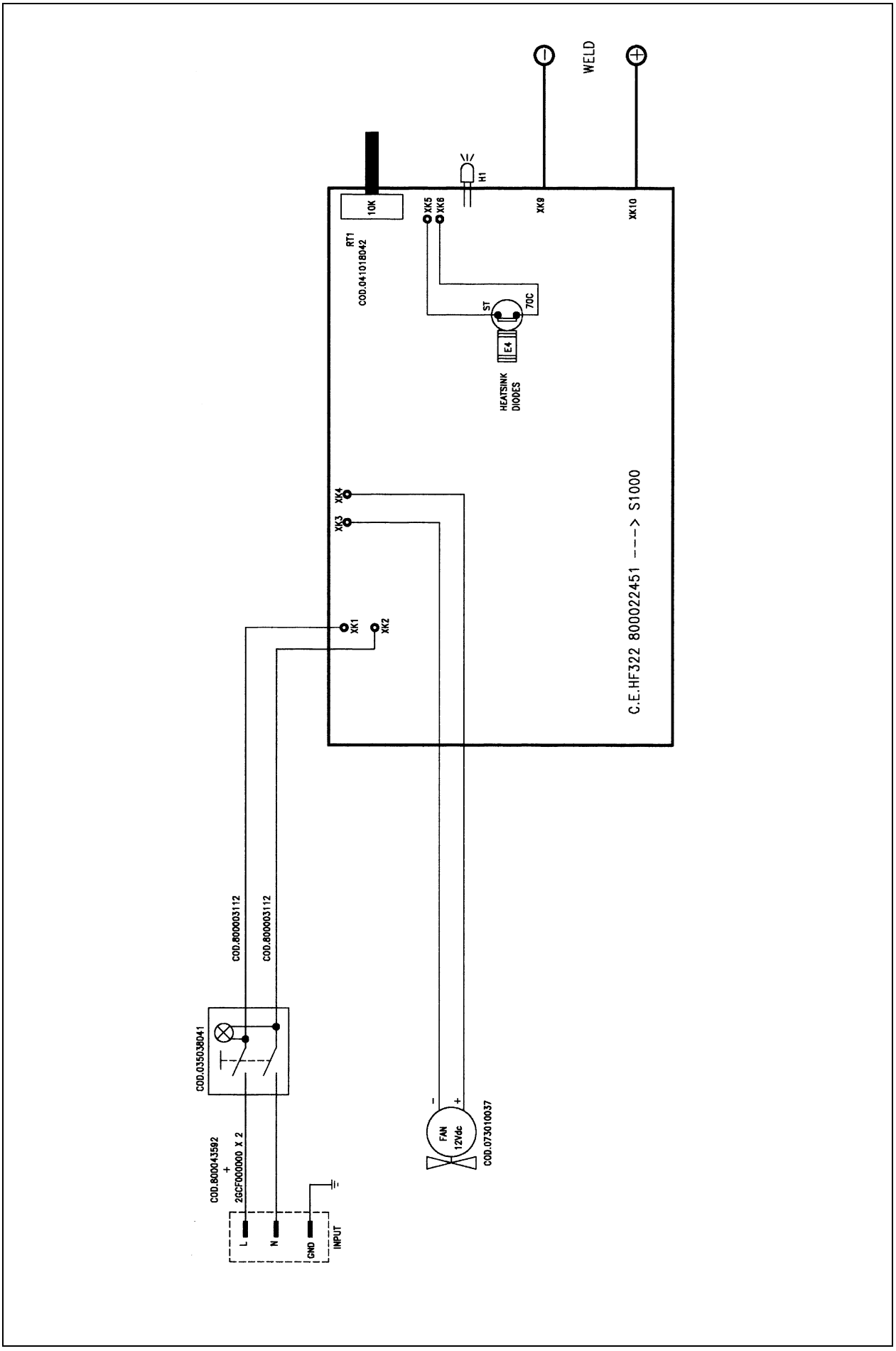
WELD
H1
10K
XK5
XK6
XK9
XK10
RT1
COD.041018042
ST
70C
E4
HEATSINK
DIODES
XK4
XK3
XK1
XK2
C.E.HF322 800022451 ---> S1000
COD.800003112
COD.800003112
COD.035038041
COD.800043592
+
2GCF000000 X 2
L
N
GND
INPUT
FAN
12Vdc
COD.073010037

CIRCUITO ELETTRONICO - ELECTRONIC CIRCUIT - CIRCUIT ÉLECTRONIQUE - ELEKTRONIKSCHALTUNG - CIRCUITO ELECTRÓNICO
RIF. 1 - HF 322 - COD. 800022451

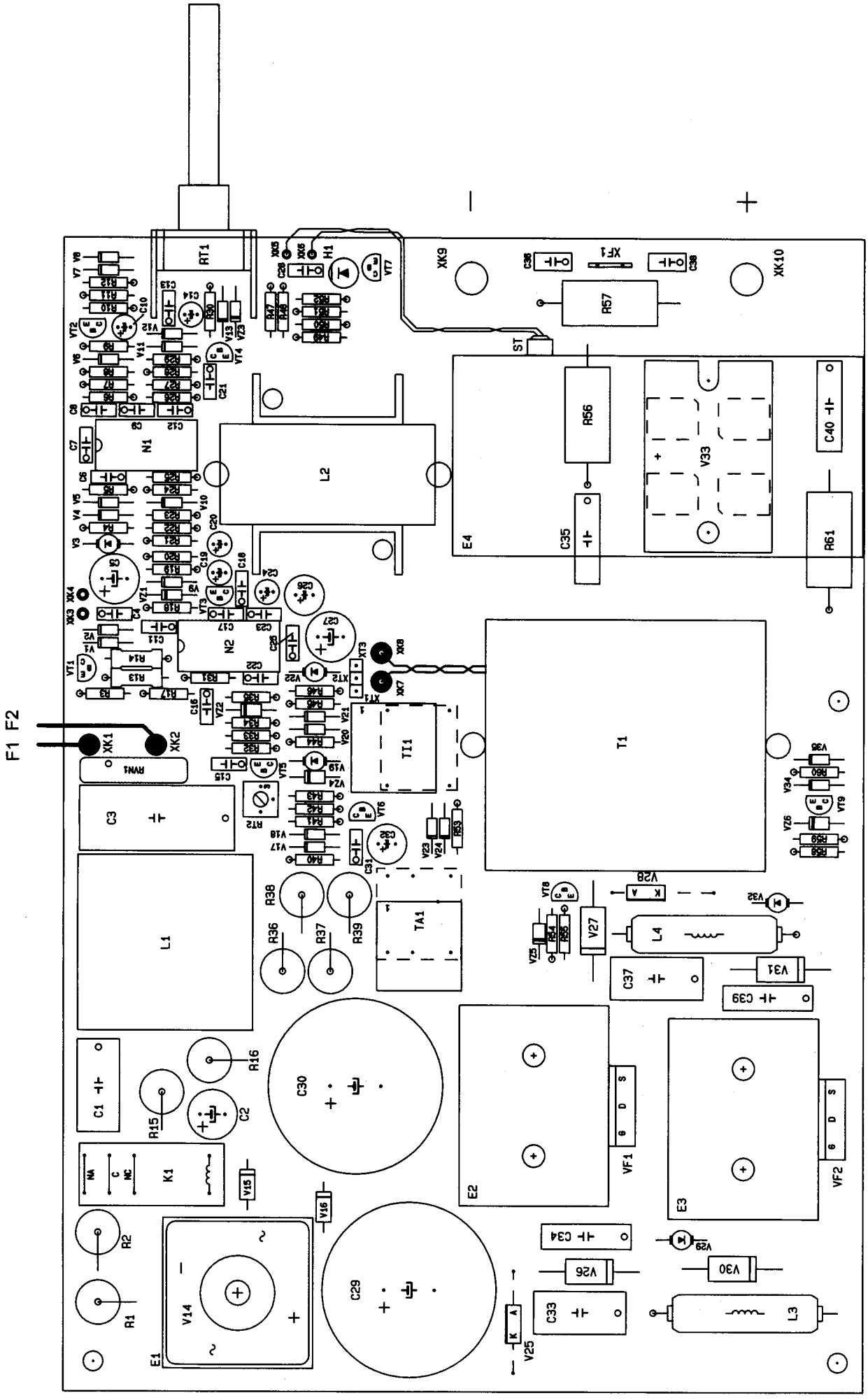

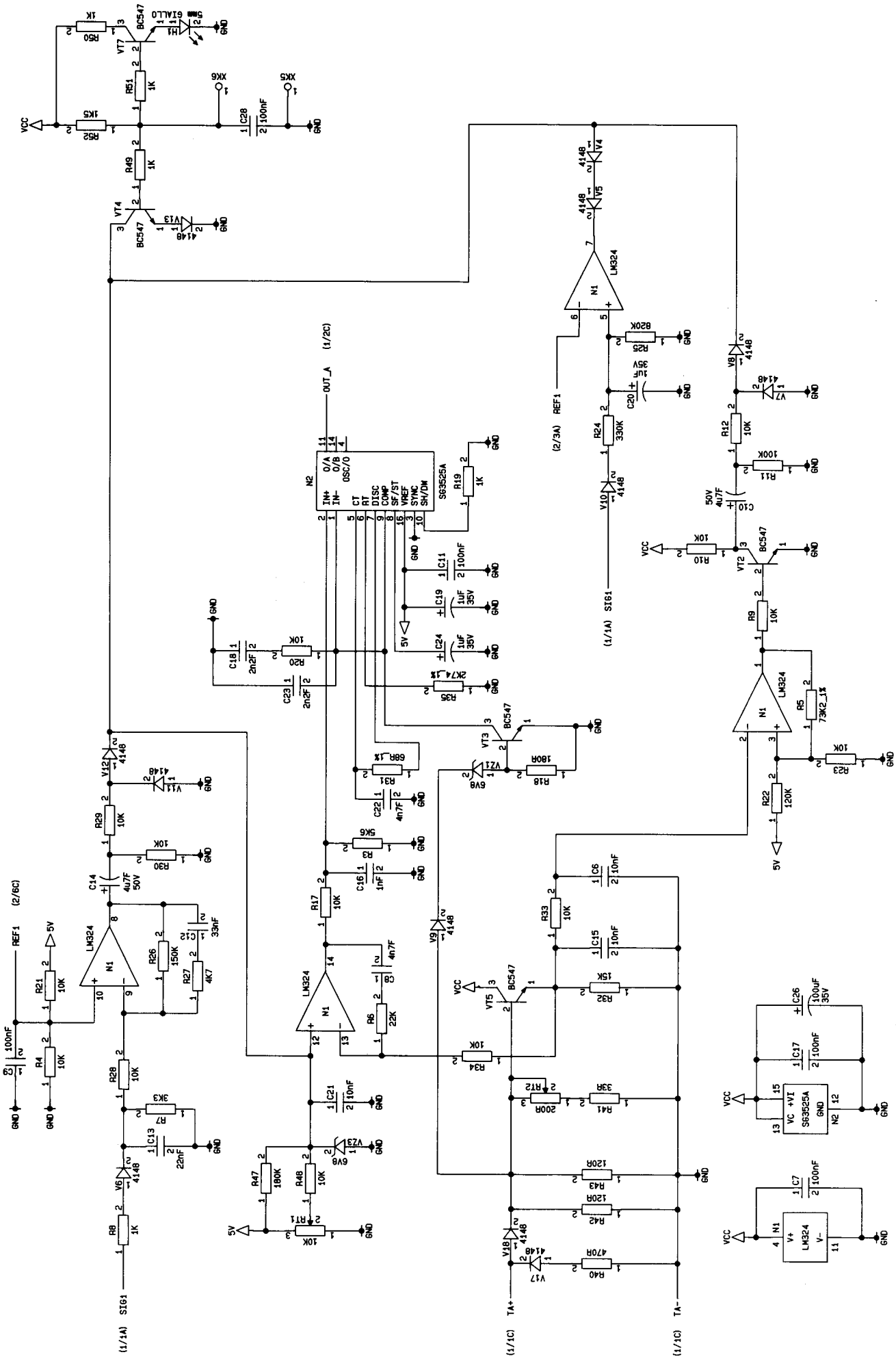

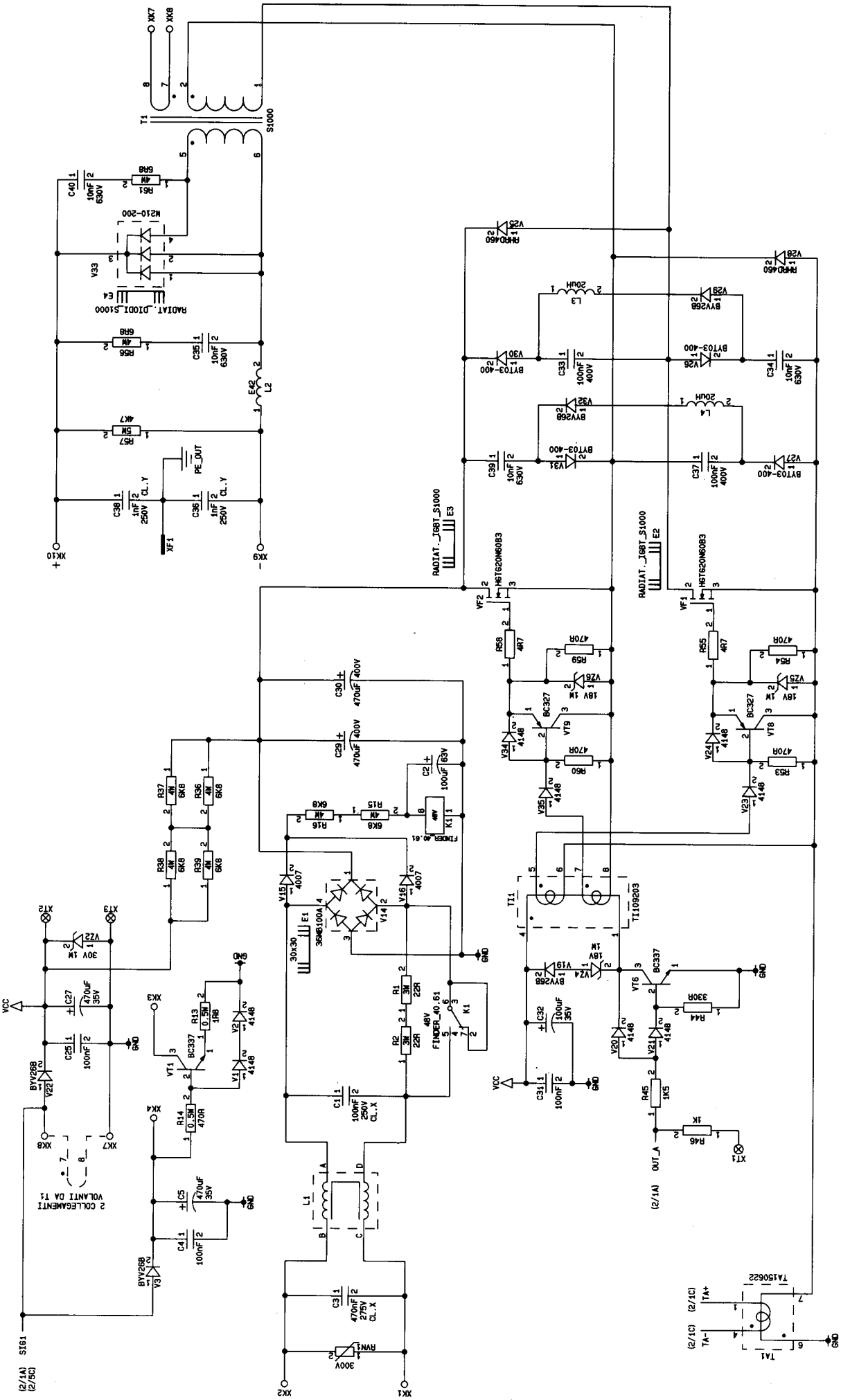

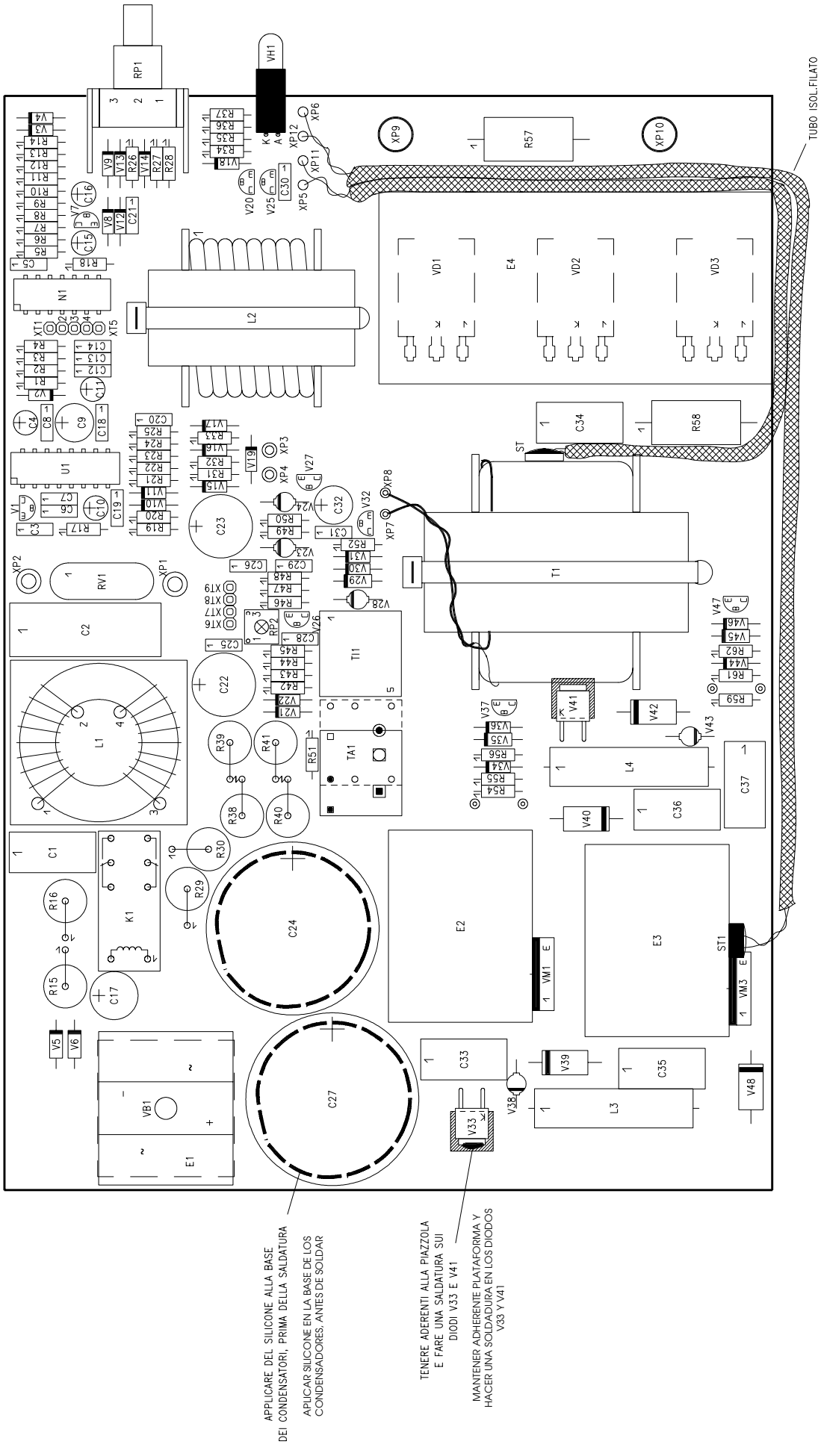
TUBO ISOL.FILATO
APPLICARE DEL SILICONE ALLA BASE DEI CONDENSATORI, PRIMA DELLA SALDATURA
APLICAR SILICONE EN LA BASE DE LOS CONDENSADORES, ANTES DE SOLDAR
TENERE ADERENTI ALLA PIAZZOLA E FARE UNA SALDATURA SUI DIODI V33 E V41
MANTENER ADHERENTE PLATAFORMA Y HACER UNA SOLDADURA EN LOS DIODOS V33 Y V41

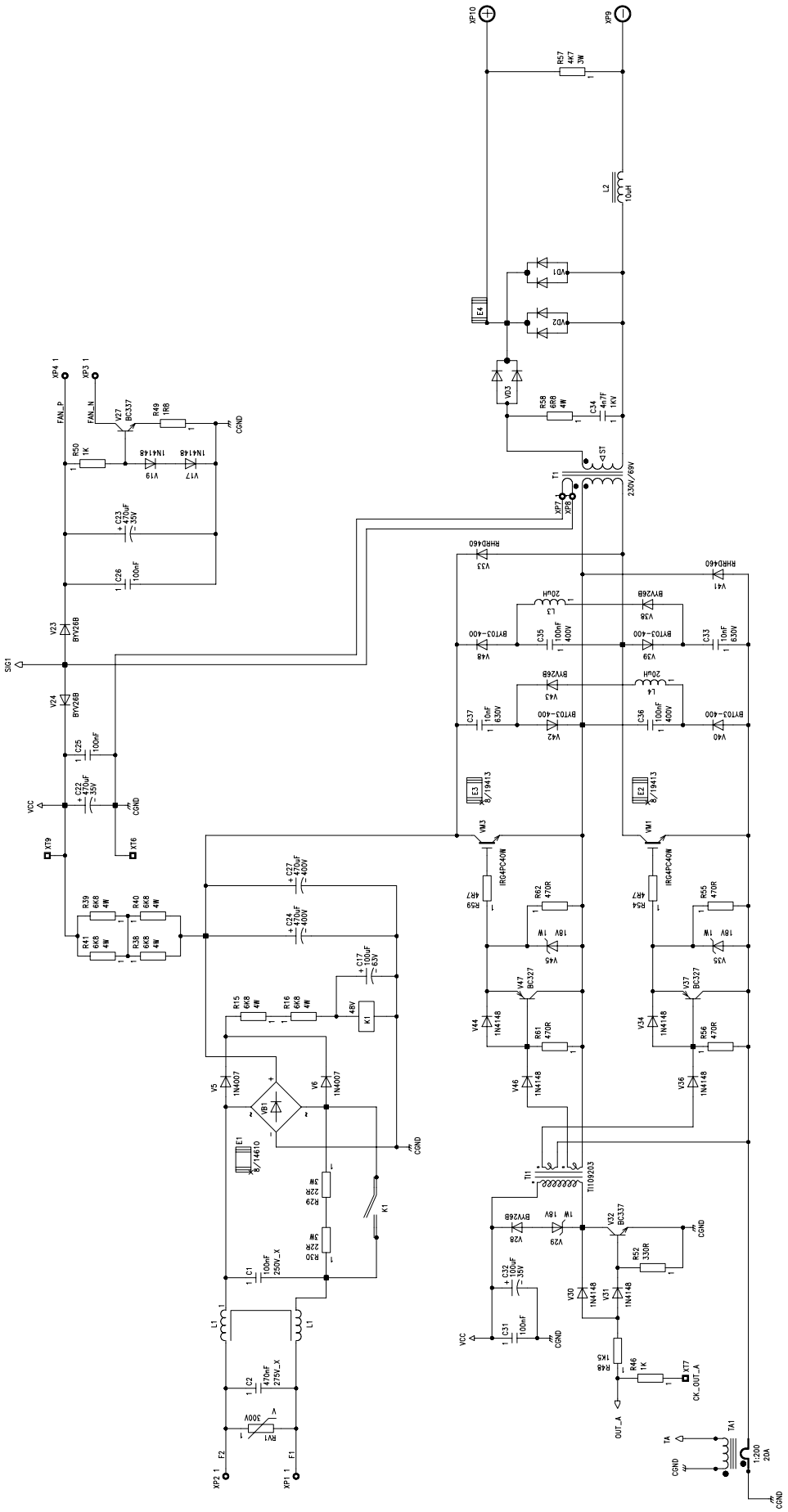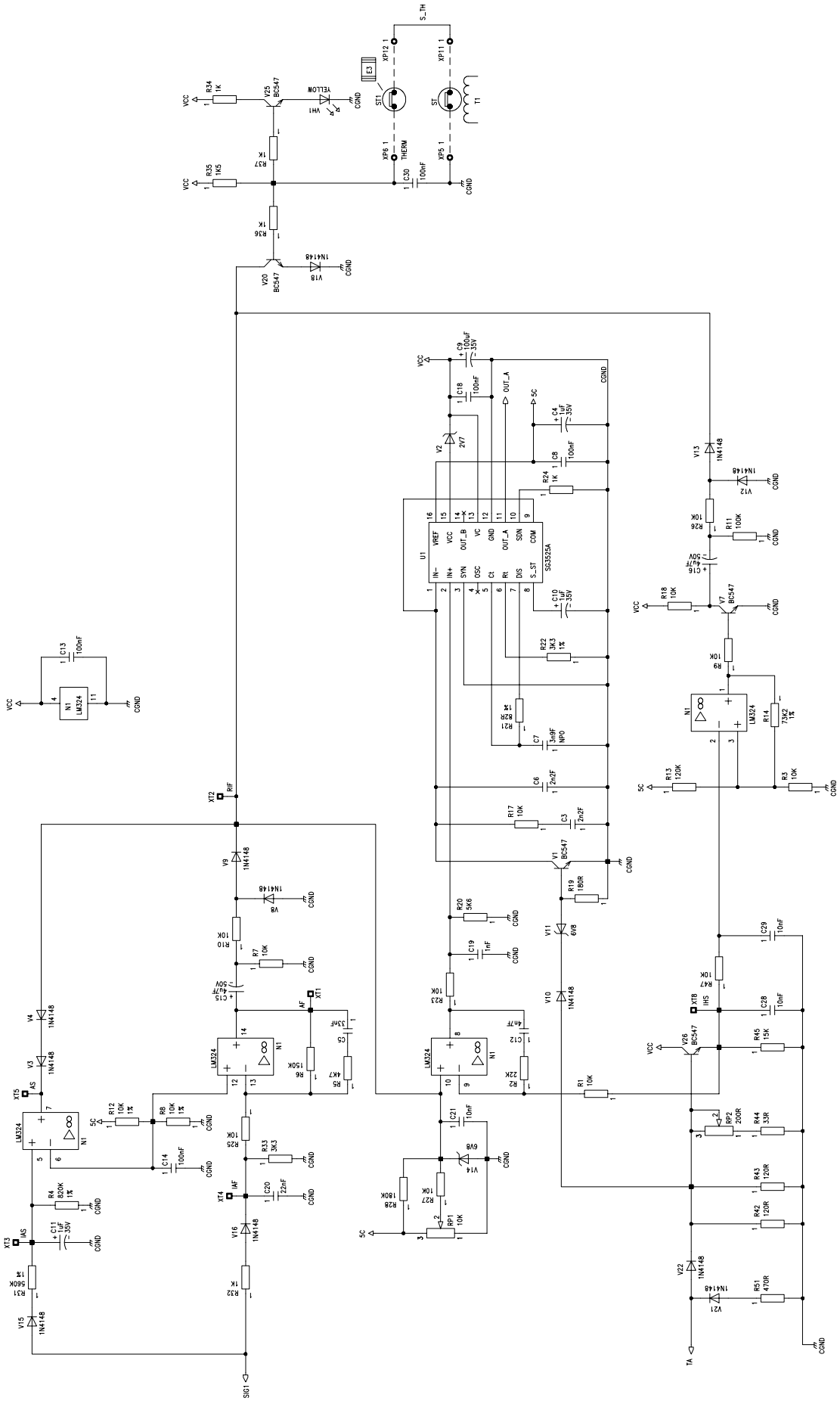
XP10
XP9
R57 4K7 3W
L2 10uH
VD1
VD2
E4
VD3
R58 6R8 4W
C34 4n7F 1KV
4ST
T1
230V/68V
XP7
XP8
RHRD460
V33
V41
L3 20uH
BYV26B
V38
BYT03-400
V48
V39
C35 100nF 400V
C33 10nF 630V
L4 20uH
V43
C37 10nF 630V
V42
C36 100nF 400V
V40
E3 6/19413
E2 6/19413
VM3
VM1
IRG4PC40W
R59 4R7
R54 4R7
R62 470R
R55 470R
18V 1W
V45
V35
V47 BC327
V37 BC327
V44 1N4148
V34 1N4148
R61 470R
R56 470R
V46 1N4148
V36 1N4148
XP4 1
XP3 1
FAN_P
FAN_N
V27 BC337
R49 1M8
CGND
R50 1K
1N4148
V19
V17
C23 470uF 35V
C26 100nF
V23 BYV26B
SIG1
V24 BYV26B
C25 100nF
C22 470uF 35V
VCC
CGND
XT9
XT6
C27 470uF 400V
C24 470uF 400V
R39 6K8 4W
R40 6K8 4W
R41 6K8 4W
R38 6K8 4W
C17 100uF 63V
R15 6K8 4W
R16 6K8 4W
48V
K1
V5 1N4007
V6 1N4007
VB1
E1 6/14610
CGND
R29 22R 3W
R30 22R 3W
K1
C1 100nF 250V_X
L1
L1
C2 470nF 275V_X
300V
RT1
F2
F1
XP2 1
XP1 1
T11
T1109203
V28 BYV26B
18V 1W
V29
V32 BC337
CGND
R52 330R
C32 100uF 35V
V30 1N4148
V31 1N4148
VCC
C31 100nF
CGND
R48 1K5
R46 1K
XT7
CK_OUT_A
OUT_A
TA
TA1
1:200 20A
CGND